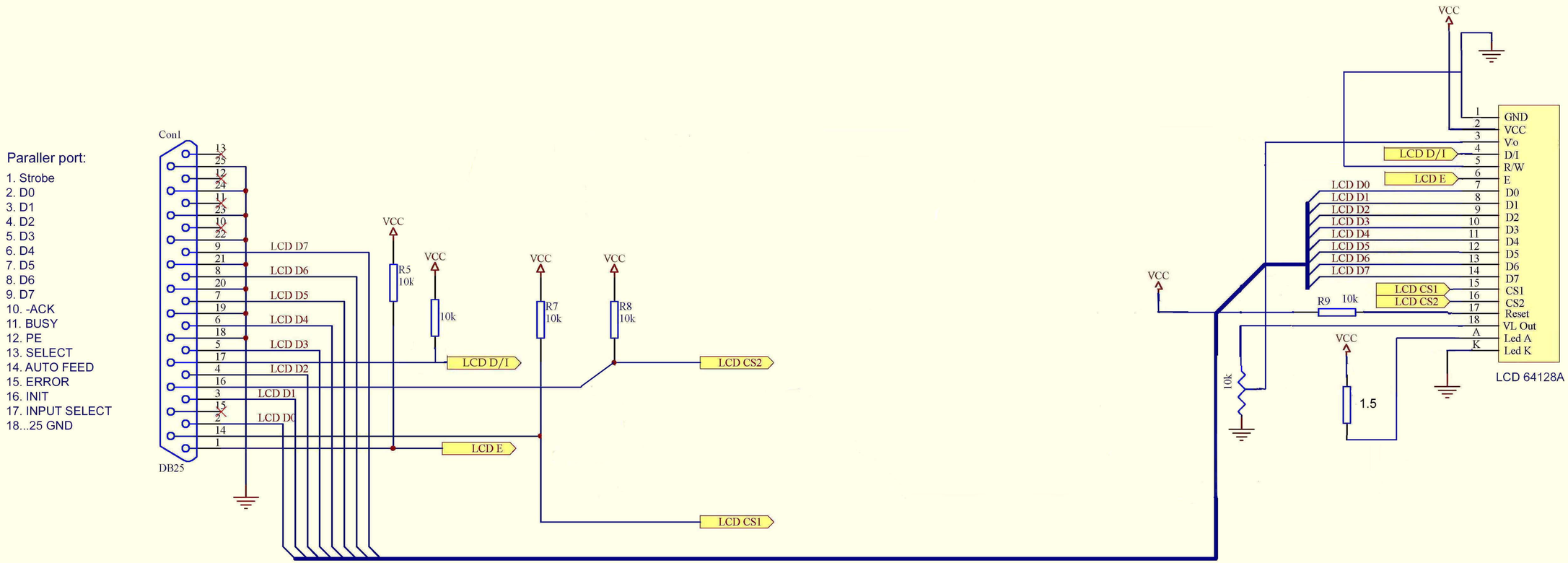

Title		
Displaytech 64128A LCD for paraller port		
Size B	Number	Revision
Date: 15.1.2001		Sheet 1 of 1
File:		Drawn By: OH5HRM